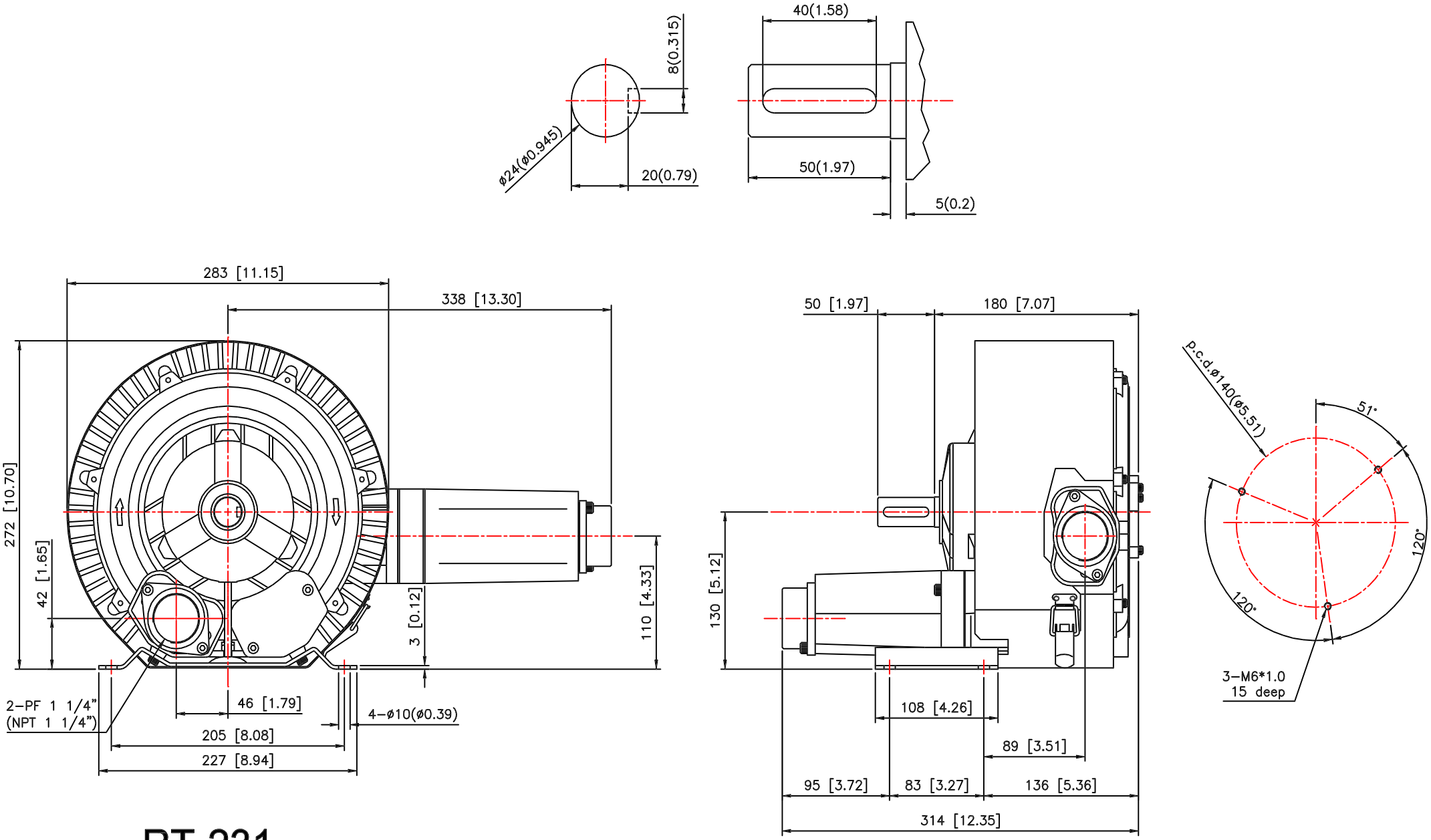

RT-231

Drawing name : RT-231				
Design by		Date :	Scale : 1 : 5	Unit : mm(")	Material :

Zepher UK Ltd **www.zepher-uk.com**