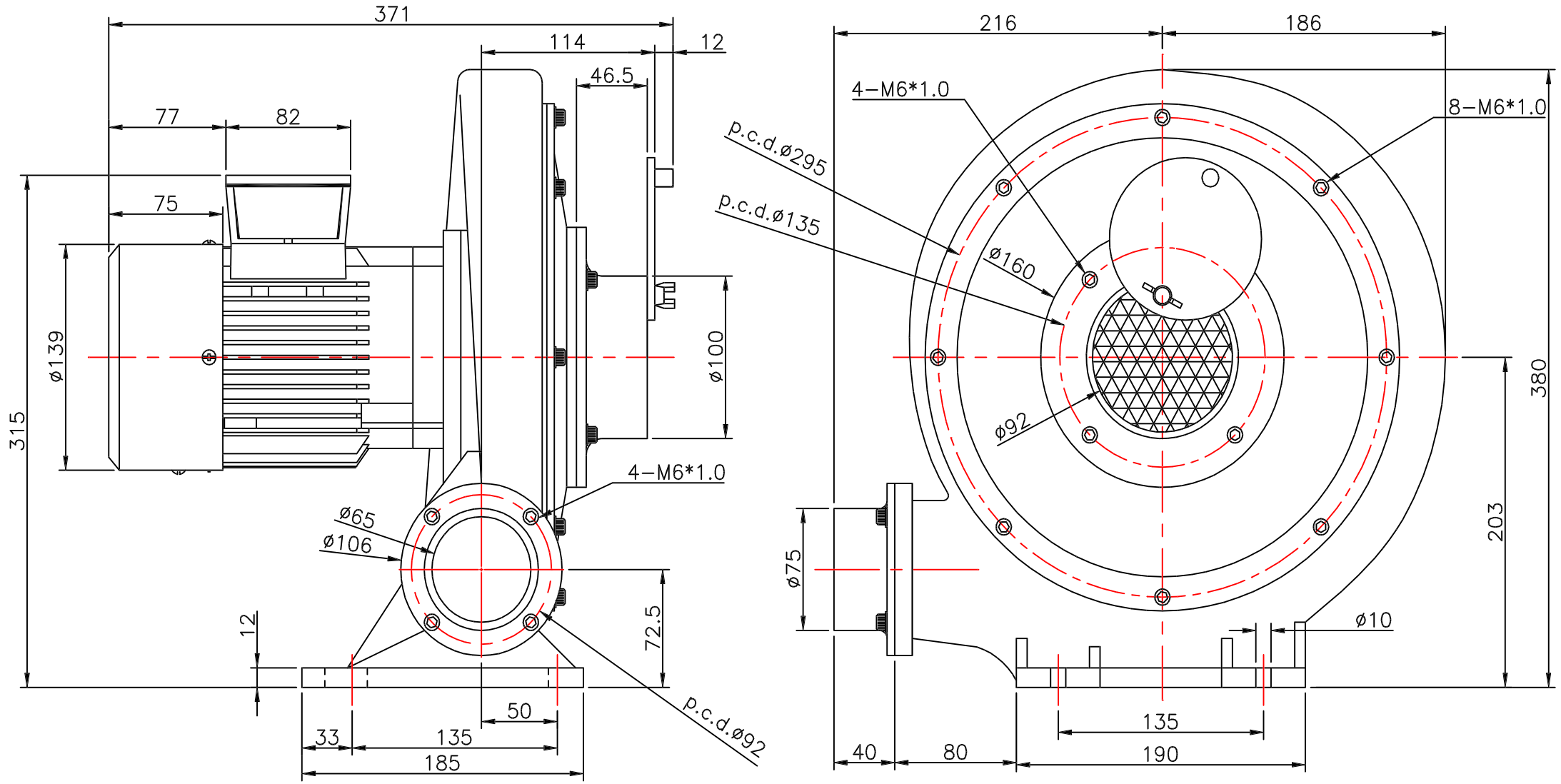

TB-0400

Drawing name : TB-0400				
Design by		Date :	Scale : 1 : 4	Unit : mm	Material :

Zepher UK Ltd **www.zepher-uk.com**