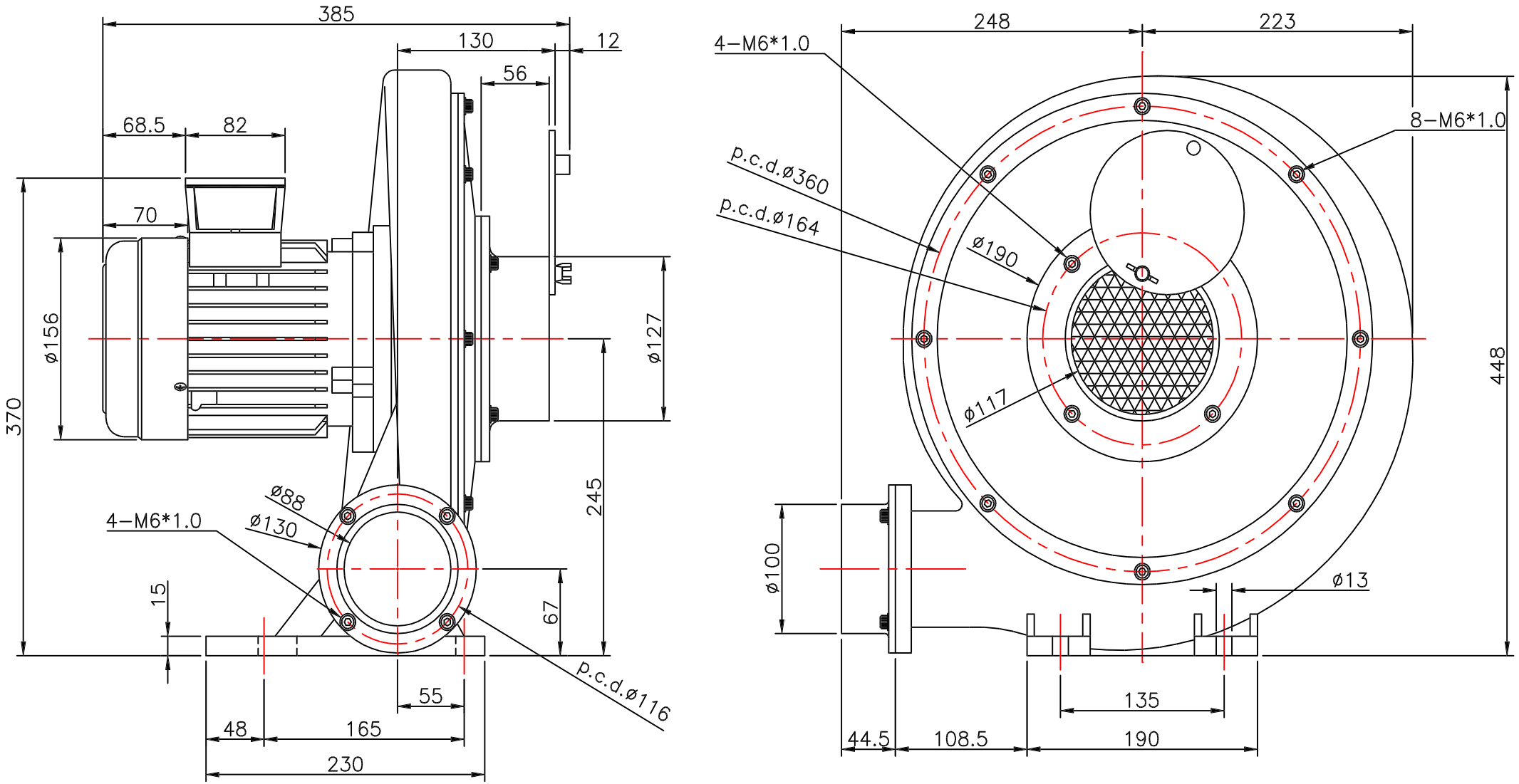


TB-0750

| | | | | |
|---|---|---|---|---|
| Drawing name : TB-0750 | | | | |
| Design by | | Date : | Scale : 1 : 5 | Unit : mm | Material : |

**Zepher UK Ltd** **www.zepher-uk.com**